# Cucina ascot A10FF-4M X-C S Steel G20/20 230/50 EU

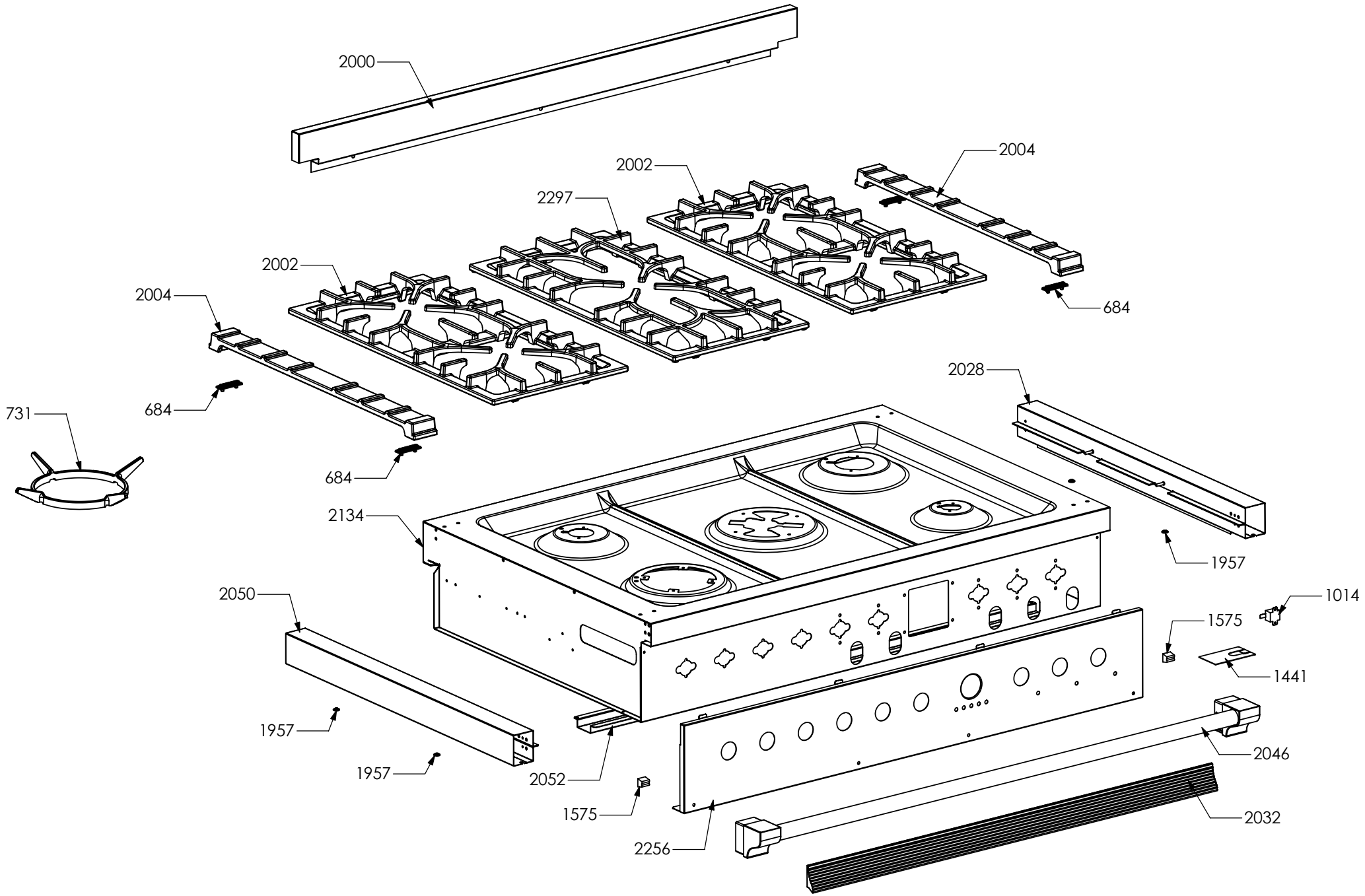

# Cucina ascot A10FF-4M X-C S Steel G20/20 230/50 EU

| N° Object | Code | Description | Qty |
|---|---|---|---|
| 684 | ZS1864 | Support for lateral cast-iron grid cooktop 100 | 4 |
| 731 | ZS0565 | Cast-iron grid for wok | 1 |
| 1014 | ZS2026 | Thermostat TY60 N.O. fixing B | 1 |
| 1441 | ZS2665 | Support for fan timelag device | 1 |
| 1575 | ZS2931 | Spacer between glasses | 2 |
| 1957 | ZS3495 | Washer 4.3 x 10 x 3 | 4 |
| 2000 | ZS3185 | Back splash for cooker 100 Ascot | 1 |
| 2002 | ZS3193 | Cast-iron grid 2 burners | 2 |
| 2004 | ZS3196 | Cast-iron grid for lateral cooktop 100 Ascot | 2 |
| 2028 | ZS3330 | Complete upper right side Ascot | 1 |
| 2032 | ZS3534 | Profile control panel drawer 100 Ascot chromed | 2 |
| 2046 | ZS3590 | Handle for hob cooker Ascot 100 chromed | 1 |
| 2050 | ZS3641 | Complete upper left side Ascot | 1 |
| 2052 | ZS3643 | Support for internal support control panel 100 Ascot | 1 |
| 2134 | ZS3177 | Complete spill tray cooker 100 5M burners Ascot | 1 |
| 2256 | ZS4056 | Control panel front 5/6 burners M Ascot 100 inox with serygr. | 1 |
| 2297 | ZS3194 | Cast-iron grid 2 burners | 1 |

# Cucina ascot A10FF-4M X-C S Steel G20/20 230/50 EU

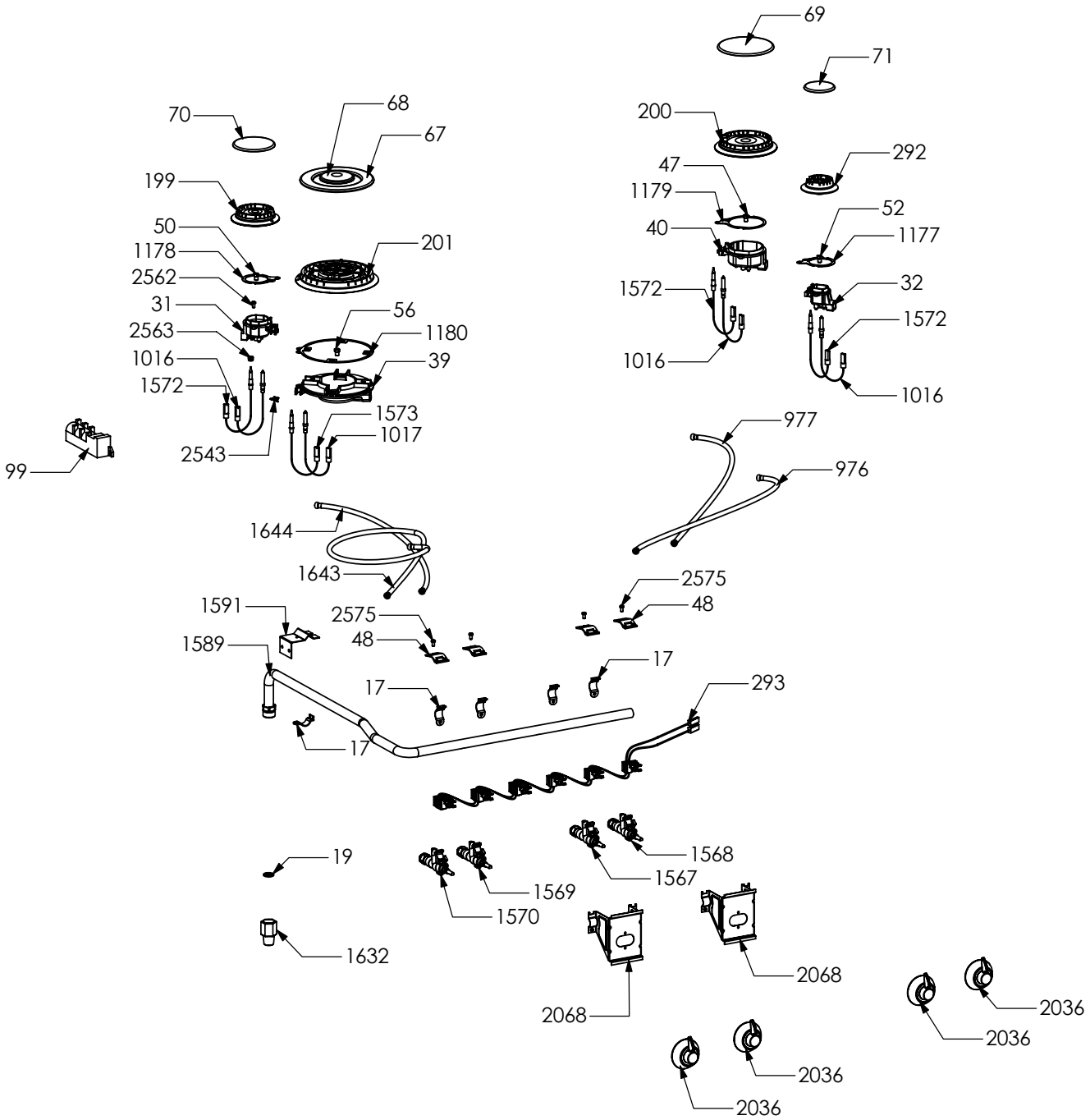

# Cucina ascot A10FF-4M X-C S Steel G20/20 230/50 EU

| N° Object | Code | Description | Qty |
|---|---|---|---|
| 17 | 370788 | Ramp support bridle | 5 |
| 19 | 400689 | Gasket gas inlet | 1 |
| 31 | 414121 | Semi-rapid burner body G20 0,97 | 1 |
| 32 | 414123 | Auxiliary burner body G20 0,72 | 1 |
| 39 | 414210 | Triple ring burner body 3.3 G20 1,28 | 1 |
| 40 | 414212 | Rapid burner body G20 1,15 | 1 |
| 47 | 421312 | Rapid burner nozzle G30/31 29/37 mbar 0,85 | 1 |
| 48 | 421323 | Gas taps fixing bridle M60 | 4 |
| 50 | 423948 | Semi-rapid burner nozzle G30/31 0,65 | 1 |
| 52 | 423951 | Auxiliary burner nozzle G30/30 0,50 | 1 |
| 56 | 424046 | Triple ring 3.3 nozzle G30/30 0,93 | 1 |
| 67 | 440400 | Plate triple-crown burner | 1 |
| 68 | 440401 | Plate central triple-crown burner | 1 |
| 69 | 440403 | Plate rapid burner | 1 |
| 70 | 440404 | Plate semi-rapid burner | 1 |
| 71 | 440405 | Plate auxiliary burner | 1 |
| 99 | 481918 | Ignition system 6 flames | 1 |
| 199 | ZS0275 | Semi-rapid burner flame spreader | 1 |
| 200 | ZS0276 | Rapid burner flame spreader | 1 |
| 201 | ZS0284 | Triple ring burner flame spreader 3.3 | 1 |
| 292 | ZS0577 | Auxiliary burner flame spreader | 1 |
| 293 | ZS0578 | Micro catenary for 6 burners | 1 |
| 976 | ZS1571 | Pipe ramp for front right auxiliary burner cooker 100 (Fryer/barbecue) | 1 |
| 977 | ZS1572 | Pipe ramp for rear right auxiliary burner cooker 100 (Fryer/barbecue) | 1 |
| 1016 | ZS2064 | Burner spark plug L=900 | 3 |
| 1017 | ZS2065 | Triple ring burner spark plug L=900 | 1 |
| 1177 | ZS2217 | Gasket for auxiliary burner | 1 |
| 1178 | ZS2218 | Gasket for semi-rapid burner | 1 |
| 1179 | ZS2219 | Gasket for rapid burner | 1 |
| 1180 | ZS2220 | Gasket for triple ring burner | 1 |
| 1567 | ZS2923 | Valved tap for auxiliary burner (bypass 0,27) | 2 |
| 1568 | ZS2924 | Valved tap for rapid/fish-kettle burner | 1 |
| 1569 | ZS2925 | Valved tap for semi-rapid burner | 1 |
| 1570 | ZS2926 | Valved tap for triple-ring burner | 2 |
| 1572 | ZS2928 | Thermocouple SBF L=750 (dis 896) | 3 |
| 1573 | ZS2929 | Thermocouple SBF L=750 TC 3.3 | 1 |
| 1589 | ZS2932 | Ramp 6 burners cooker 90/100 double oven 06 | 1 |
| 1591 | ZS2934 | Rear ramp fixing support cooker 100 triple oven | 1 |
| 1632 | ZS3021 | Adapter female-male 1/2 BSP 04 | 1 |
| 1643 | ZS3064 | Pipe ramp for front left triple ring burner cooker 100 05 | 1 |
| 1644 | ZS3065 | Pipe ramp for rear left semi-rapid burner cooker 100 05 | 1 |
| 2036 | ZS3546 | Knob Ascot chromed | 4 |
| 2068 | ZS3791 | Ramp fixing support Ascot /XXL | 2 |
| 2543 | 601229 | Spring fixing spark plug for triple ring P-4 | 4 |
| 2562 | 506037 | Screw M3x8 TC s.steel | 10 |
| 2563 | ZS0907 | Fixing nut for themocouple | 4 |
| 2575 | 505241 | Screw M6 | 4 |

# Cucina ascot A10FF-4M X-C S Steel G20/20 230/50 EU

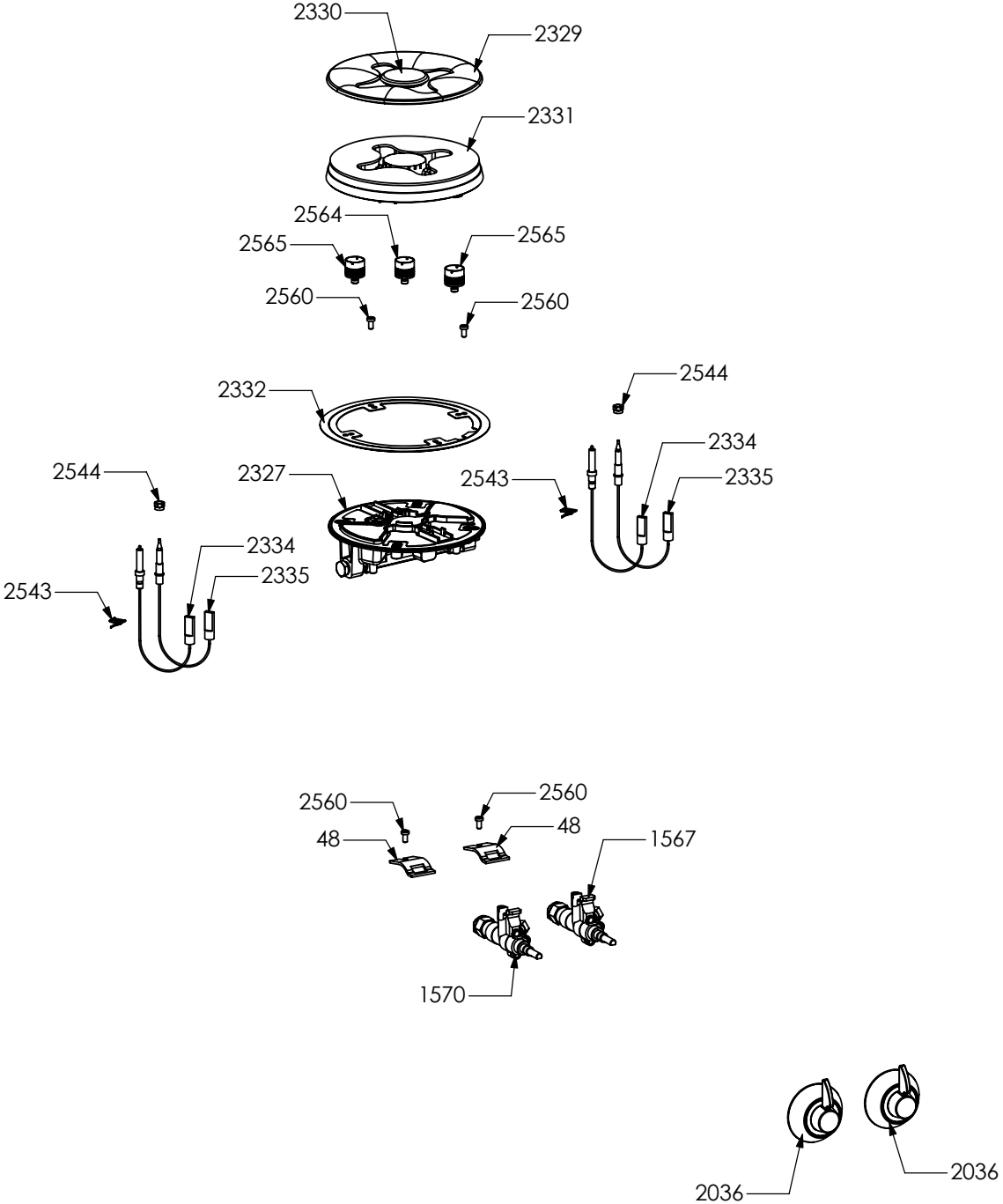

# Cucina ascot A10FF-4M X-C S Steel G20/20 230/50 EU

| N° Object | Code | Description | Qty |
|---|---|---|---|
| 48 | 421323 | Gas taps fixing bridle M60 | 2 |
| 1567 | ZS2923 | Valved tap for auxiliary burner (bypass 0,27) | 2 |
| 1570 | ZS2926 | Valved tap for triple-ring burner | 2 |
| 2036 | ZS3546 | Knob Ascot chromed | 2 |
| 2327 | ZS4172 | Triple ring burner body 4,5 Kw G20/20 0,72  0,95 | 1 |
| 2329 | ZS4174 | Plate triple-crown burner 4.5 Kw | 1 |
| 2330 | ZS4175 | Plate central triple-crown burner 4.5 | 1 |
| 2331 | ZS4176 | Triple ring burner flame spreader 4.5 | 1 |
| 2332 | ZS4177 | Gasket for triple ring burner 4.5 | 1 |
| 2334 | ZS4180 | Spark plug triple crown burner 4.5 | 2 |
| 2335 | ZS4181 | Thermocouple SBF L=600 t.c.4.5 | 2 |
| 2543 | 601229 | Spring fixing spark plug for triple ring P-4 | 2 |
| 2544 | ZS4186 | Fixing washer for thermocouple burner 4.5 | 2 |
| 2560 | ZS4182 | Screw TC | 4 |
| 2564 | ZS4569 | Triple ring 4.5 nozzle G30/30 0,46 | 1 |
| 2565 | ZS4570 | Triple ring 4,5 nozzle G30/30 0,66 | 2 |

# Cucina ascot A10FF-4M X-C S Steel G20/20 230/50 EU

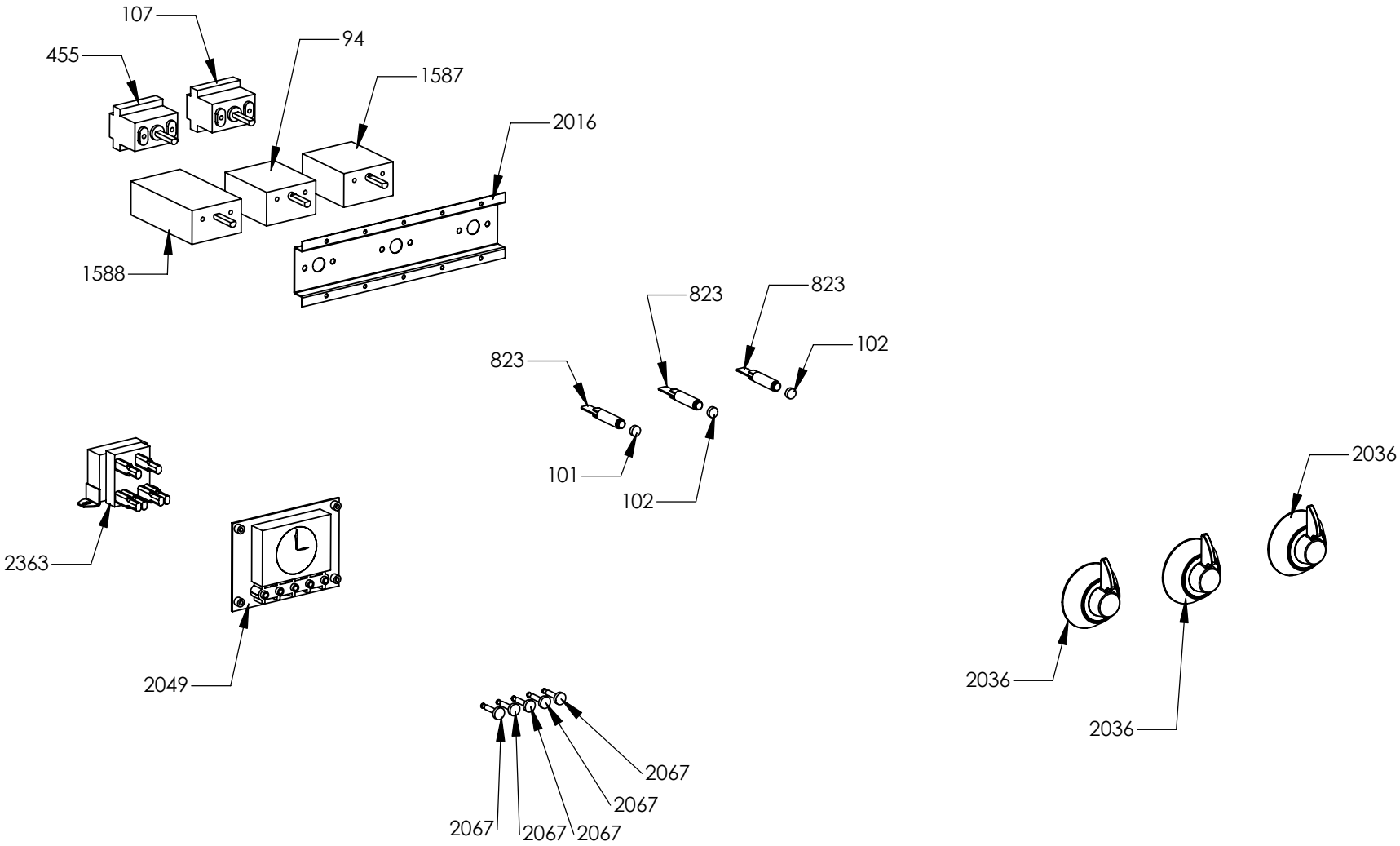

# Cucina ascot A10FF-4M X-C S Steel G20/20 230/50 EU

| N° Object | Code | Description | Qty |
|---|---|---|---|
| 94 | 481814 | Commutator multif. for 90 built-in oven(no pizza) | 1 |
| 101 | 482056 | Led red | 1 |
| 102 | 482057 | Led orange | 2 |
| 107 | 482120 | Thermostat cooker 192 | 1 |
| 455 | ZS1075 | Thermostat for built-in oven | 1 |
| 823 | ZS1755 | Fluorescent orange warning light micro | 3 |
| 1587 | ZS2888 | Commutator oven functions 30 EGO | 1 |
| 1588 | ZS2889 | Commutator oven functions 90 EGO | 1 |
| 2016 | ZS3227 | Commutator support | 1 |
| 2036 | ZS3546 | Knob Ascot chromed | 3 |
| 2049 | ZS3626 | Timer ELA 1000 | 1 |
| 2067 | ZS3785 | Knob for timer black | 5 |
| 2363 | ZS3627 | Trasformer for timer Siebe ELA 1000 H/001 | 1 |

# Cucina ascot A10FF-4M X-C S Steel G20/20 230/50 EU

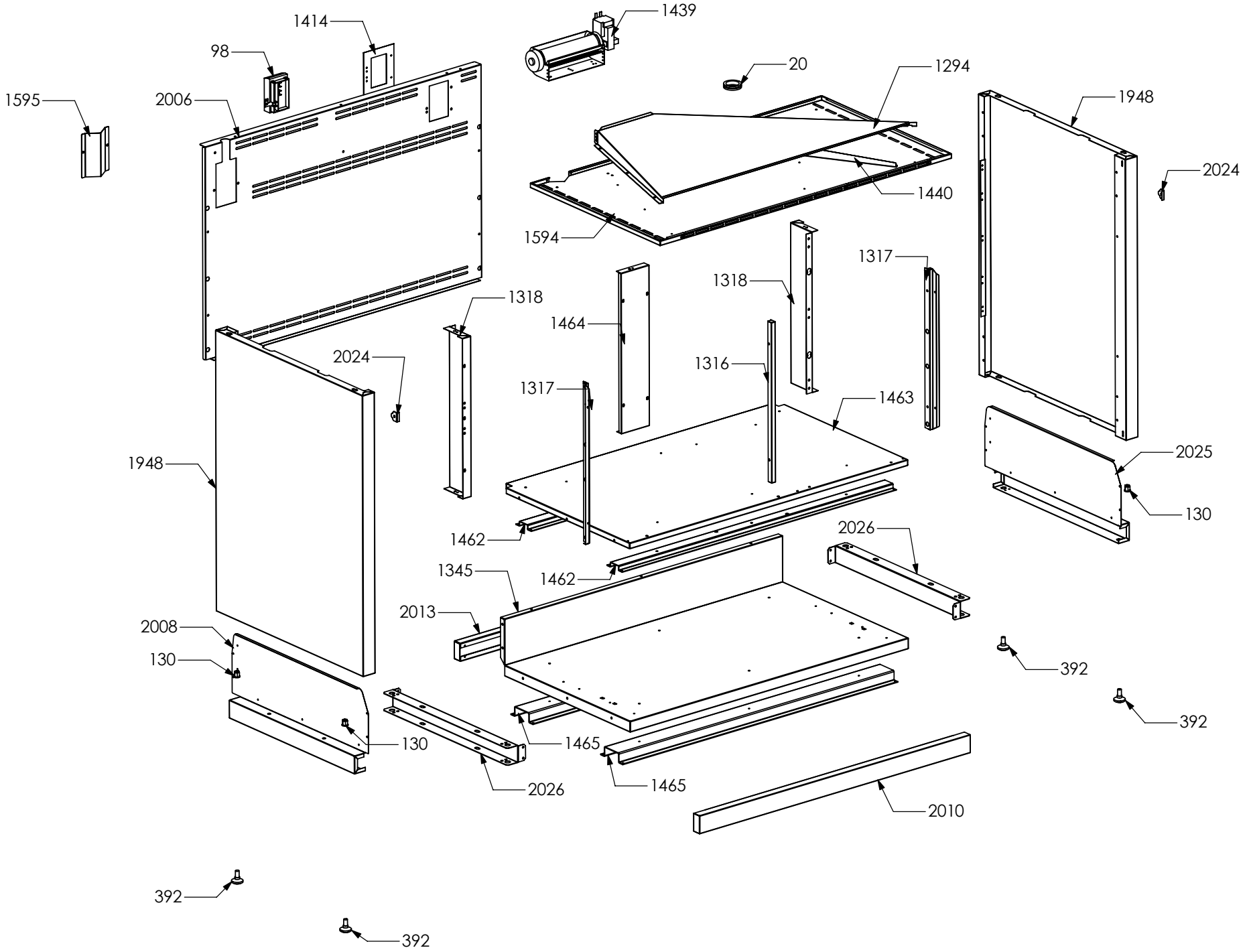

# Cucina ascot A10FF-4M X-C S Steel G20/20 230/50 EU

| N° Object | Code | Description | Qty |
|---|---|---|---|
| 20 | 401520 | Black cap for glass front panel | 2 |
| 98 | 481913 | Terminal board for oven 32 PA 233 | 1 |
| 392 | ZS0903 | Sintesi black foot H.15 | 4 |
| 1294 | ZS2440 | Upper conveyor air 100 DC double oven | 1 |
| 1316 | ZS2474 | Front central muffle support cooker 100/120 double oven | 1 |
| 1317 | ZS2475 | Front support for muffle R/L side 100/120 double/triple oven cooker | 2 |
| 1318 | ZS2477 | Rear support for muffle left/right side cooker 100 double/triple oven | 2 |
| 1345 | ZS2479 | Lower guard for cooker 100 double oven 04 | 1 |
| 1414 | ZS2601 | Terminal board support | 1 |
| 1439 | ZS2663 | Tangential oven fan L=180 Plaset (AU) | 1 |
| 1440 | ZS2664 | Air conveyor separator cooker 100 DC/TC | 1 |
| 1462 | ZS2472 | Support ceiling drawer cooker 100 double oven 04 | 2 |
| 1463 | ZS2473 | Drawer upper guard for cooker 100 double oven | 1 |
| 1464 | ZS2476 | Rear central support for muffle cooker 100 double oven | 1 |
| 1465 | ZS2478 | Reinforcement for lower guard cooker 100 double oven 04 | 2 |
| 1594 | ZS2937 | Muffle fan guard cooker 100 Double/Triple oven | 1 |
| 1595 | ZS2938 | Ramp covering | 1 |
| 1948 | ZS3225 | Complete lower right/left Ascot side s.steel | 2 |
| 2006 | ZS3198 | Rear guard for cooker 100 Ascot | 1 |
| 2008 | GR3201 | Assembly support lower left side Ascot | 1 |
| 130 | 601156 | Tapping screw M10 galvanized | 2 |
| 2026 | ZS3318 | Reinforcement drawer side structure plinth Ascot | 1 |
| 2010 | ZS3203 | Plinth for cooker 100 double oven Ascot | 1 |
| 2013 | ZS3206 | Plinth rear  for cooker 100 Ascot | 1 |
| 2024 | ZS3305 | Fixing plate for top Ascot | 2 |
| 2025 | GR3317 | Assembly support lower right side Ascot | 1 |
| 130 | 601156 | Tapping screw M10 galvanized | 2 |
| 2026 | ZS3318 | Reinforcement drawer side structure plinth Ascot | 1 |

| N° Object | Code | Description | Qty |
|---|---|---|---|

# Cucina ascot A10FF-4M X-C S Steel G20/20 230/50 EU

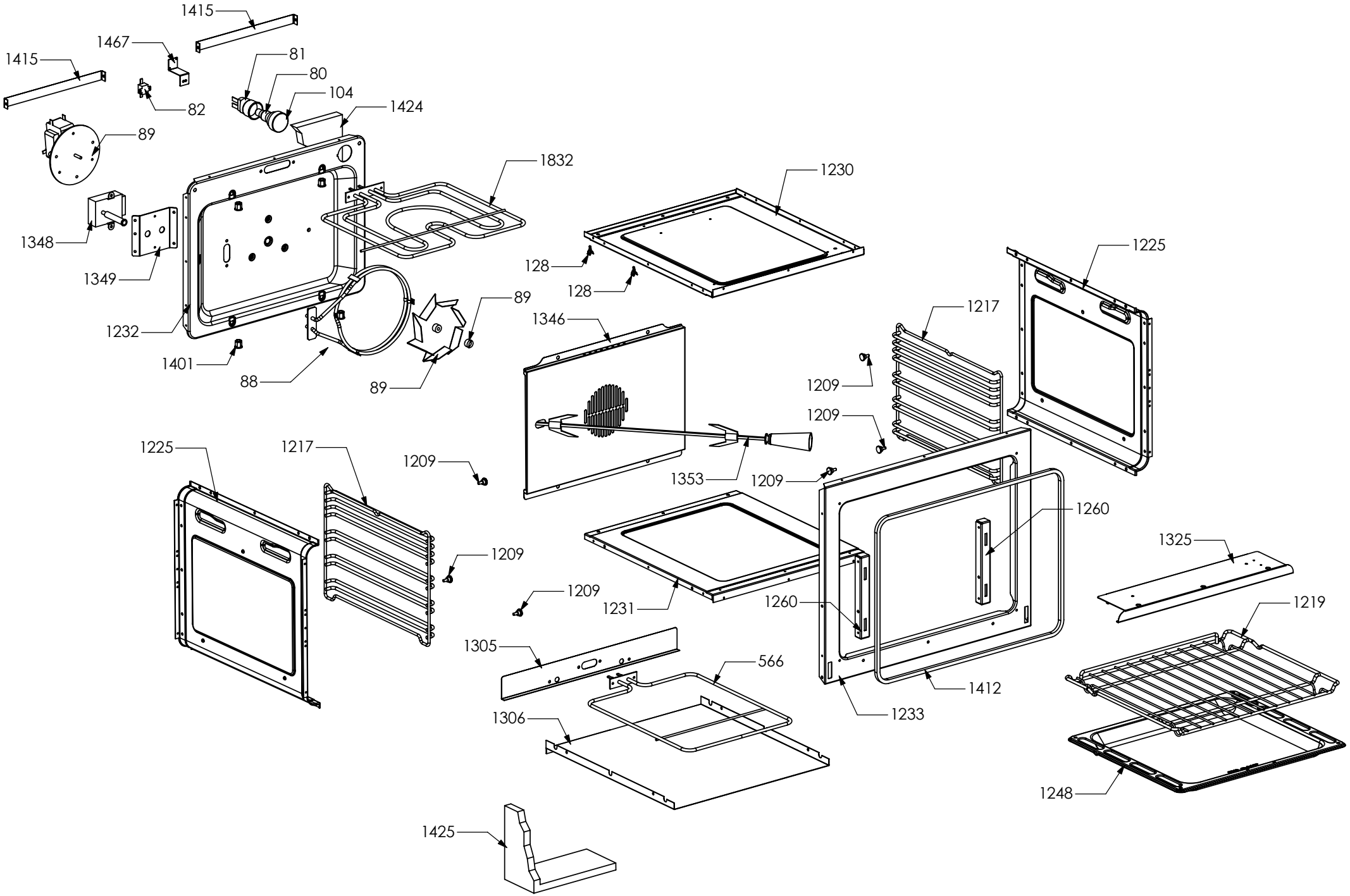

# Cucina ascot A10FF-4M X-C S Steel G20/20 230/50 EU

| N° Object | Code | Description | Qty |
|---|---|---|---|
| 80 | 481160 | Lamp 220/240V (15 W) small | 1 |
| 81 | 481161 | Lamp-holder for oven (max 25 W) | 1 |
| 82 | 481403 | Thermoswitch 10 ampere | 1 |
| 88 | 481686 | Fan element (230/240V 2100W) | 1 |
| 89 | 481727 | Tangential oven 90 fan (AU) with fan and nut | 1 |
| 104 | 482075 | Lamp protection 25W | 1 |
| 128 | 601152 | Spring fixing feeler for built-in oven | 2 |
| 566 | ZS1507 | Lower heating element for oven 60 (1200W/230V) | 1 |
| 1209 | 414559 | Lateral frame support for built-in oven | 6 |
| 1217 | ZS2283 | Oven lateral frame 30/60/90 | 2 |
| 1219 | ZS2286 | Chromed wire grid for oven 60 | 1 |
| 1225 | ZS2312 | Side muffle oven 30/60/90 enamelled 04 | 2 |
| 1230 | ZS2322 | Enamelled muffle ceiling oven 60 | 1 |
| 1231 | ZS2324 | Enamelled muffle bottom for oven 60 | 1 |
| 1232 | GR2326 | Assembly rear muffle oven 60/100 TC enamelled 04 | 1 |
| 1401 | ZS2585 | Tapping screw M5 aluminium | 4 |
| 1233 | ZS2328 | Enamelled muffle front side oven 60 | 1 |
| 1248 | ZS2364 | Enamelled drip tray for oven 60 | 1 |
| 1260 | ZS2395 | Hinge support | 2 |
| 1305 | ZS2456 | Lower heating elem.support oven 60 double oven 04 | 1 |
| 1306 | ZS2459 | Lower heating element tray oven 60 04 | 1 |
| 1325 | ZS2496 | Grill heating element support for muffle oven 60 enamelled 04 | 1 |
| 1346 | ZS2484 | Fan cover for oven 60 with turnspit hole | 1 |
| 1348 | ZS2498 | Turnspit motor reducer 50/60 Hz | 1 |
| 1349 | ZS2499 | Fixing support for turnspit motor oven 60/90 | 1 |
| 1353 | ZS2504 | Turnspit for oven 60 (4 forks + handle) - 04 | 1 |
| 1412 | ZS2598 | Gasket oven 60 04 | 1 |
| 1415 | ZS2602 | Rear support for glasswool oven 60 | 2 |

| N° Object | Code | Description | Qty |
|---|---|---|---|
| 1424 | ZS2629 | White glass wool for rear side 60 oven 04 | 1 |
| 1425 | ZS2632 | White glass wool for 60 oven 04 | 1 |
| 1467 | ZS2604 | Support for safety thermostat 04 | 1 |
| 1832 | 482094 | Grill heating element for oven 60 (1900+850W) | 1 |

# Cucina ascot A10FF-4M X-C S Steel G20/20 230/50 EU

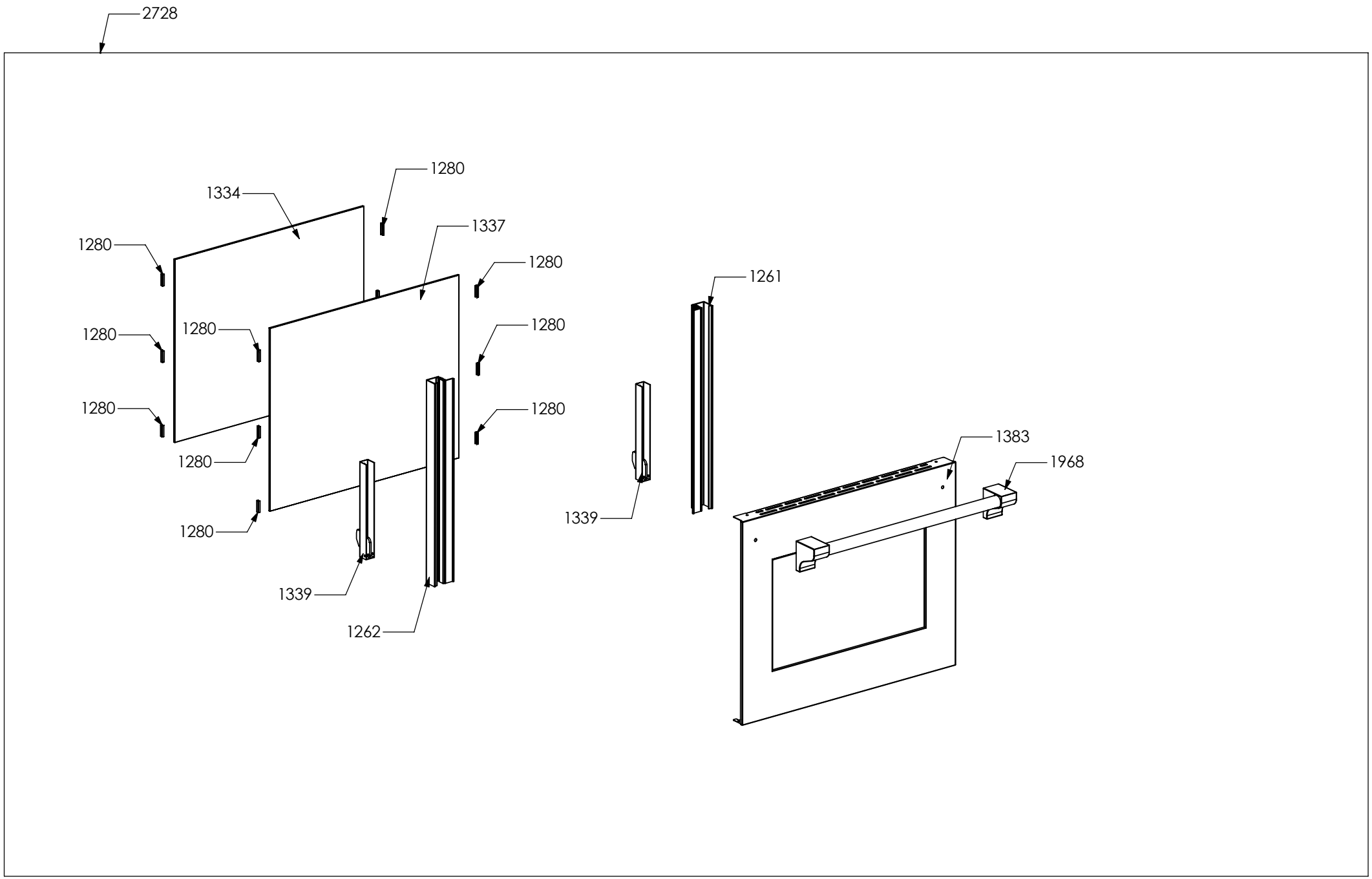

# Cucina ascot A10FF-4M X-C S Steel G20/20 230/50 EU

| N° Object | Code | Description | Qty |
|---|---|---|---|
| 1261 | ZS2396 | Door 30/60/90 right bar profile 04 | 1 |
| 1262 | ZS2397 | Door 30/60/90 left bar profile 04 | 1 |
| 1280 | ZS2419 | Spring for door glass assembling | 12 |
| 1334 | ZS2308 | Inner glass oven door 60 | 1 |
| 1337 | ZS2393 | In-between glass oven door 60 04 | 1 |
| 1339 | ZS2416 | Door hinge for multifunction oven 60 | 2 |
| 1383 | ZS2550 | Glued external oven door 60/100 double oven | 1 |
| 1968 | ZS3586 | Handle for oven door 60 Ascot 70/100 chromed | 1 |
| 2728 | GR4342 | Assembly glued external oven door 60/100 double oven Ascot | 1 |

# Cucina ascot A10FF-4M X-C S Steel G20/20 230/50 EU

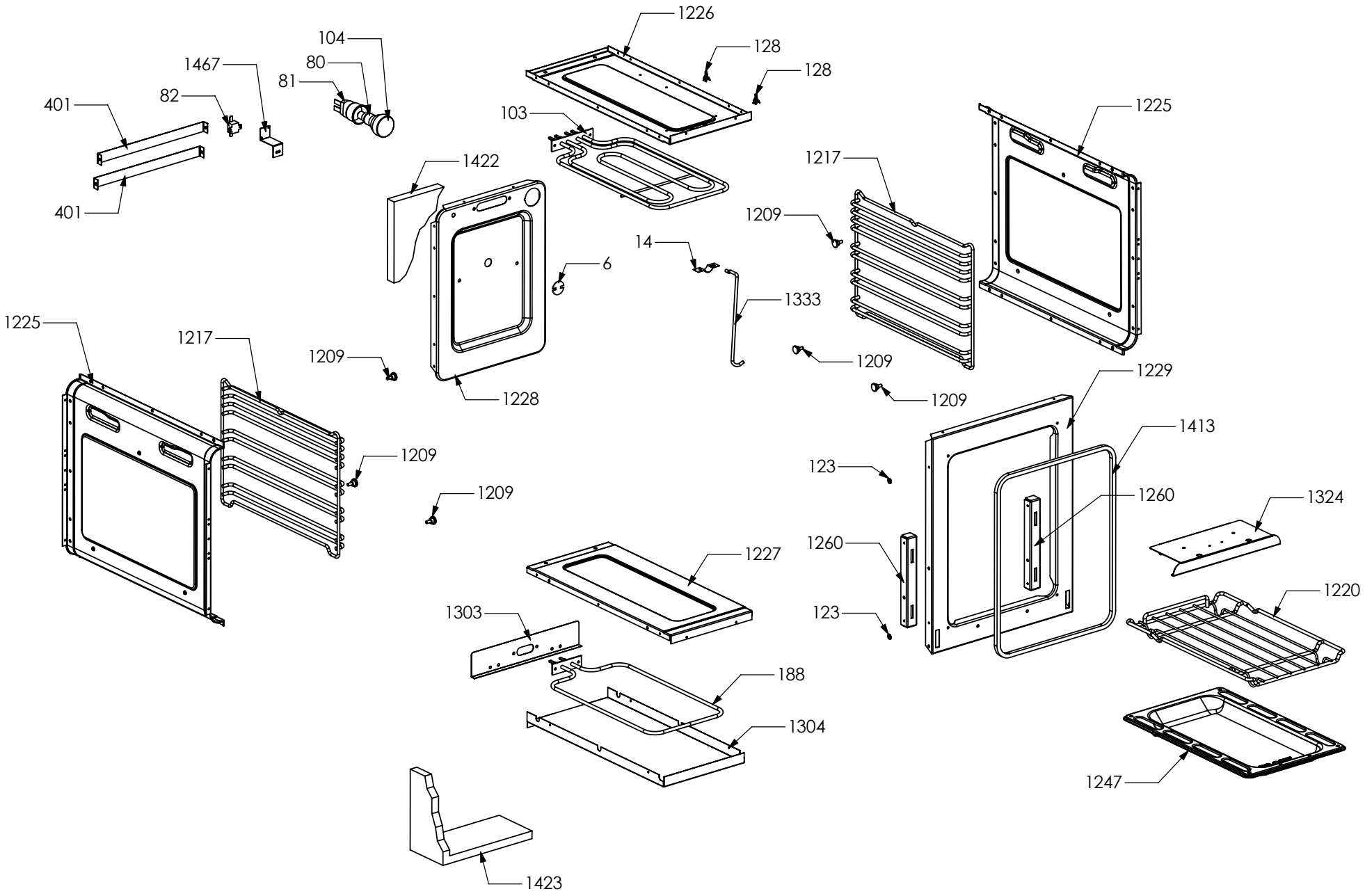

# Cucina ascot A10FF-4M X-C S Steel G20/20 230/50 EU

| N° Object | Code | Description | Qty |
|---|---|---|---|
| 6 | 071824 | Turnspit hole cap | 1 |
| 14 | 271198 | Wire fixing clip | 1 |
| 80 | 481160 | Lamp 220/240V (15 W) small | 1 |
| 81 | 481161 | Lamp-holder for oven (max 25 W) | 1 |
| 82 | 481403 | Thermoswitch 10 ampere | 1 |
| 103 | 482072 | Upper heating element cooker Ratio | 1 |
| 104 | 482075 | Lamp protection 25W | 1 |
| 123 | 541011 | Spacer washer for built-in oven | 2 |
| 128 | 601152 | Spring fixing feeler for built-in oven | 2 |
| 188 | ZS0210 | Lower heating element for oven 30 | 1 |
| 401 | ZS0956 | Rear support for glasswool oven 30 cooker 120 double oven | 2 |
| 1209 | 414559 | Lateral frame support for built-in oven | 6 |
| 1217 | ZS2283 | Oven lateral frame 30/60/90 | 2 |
| 1220 | ZS2287 | Chromed wire grid for oven 30 | 1 |
| 1225 | ZS2312 | Side muffle oven 30/60/90 enamelled 04 | 2 |
| 1226 | ZS2314 | Enamelled muffle ceiling oven 30 | 1 |
| 1227 | ZS2316 | Enamelled muffle bottom for oven 30 | 1 |
| 1228 | ZS2318 | Muffle rear side oven 30 enamelled 04 | 1 |
| 1229 | ZS2320 | Enamelled muffle front side oven 30 | 1 |
| 1247 | ZS2362 | Enamelled drip tray for oven 30 | 1 |
| 1260 | ZS2395 | Hinge support | 2 |
| 1303 | ZS2454 | Lower heating elem.support oven 30 04 | 1 |
| 1304 | ZS2455 | Lower heating element tray oven 30 04 | 1 |
| 1324 | ZS2494 | Grill heating element support for muffle oven 30 enamelled 04 | 1 |
| 1333 | ZS2289 | Support for grillrod 60/90 | 1 |
| 1413 | ZS2599 | Gasket oven 30 04 | 1 |
| 1422 | ZS2627 | White glass wool for rear side 30 oven 04 | 1 |
| 1423 | ZS2628 | White glass wool for 30 oven 04 | 1 |

| N° Object | Code | Description | Qty |
|---|---|---|---|
| 1467 | ZS2604 | Support for safety thermostat 04 | 1 |

# Cucina ascot A10FF-4M X-C S Steel G20/20 230/50 EU

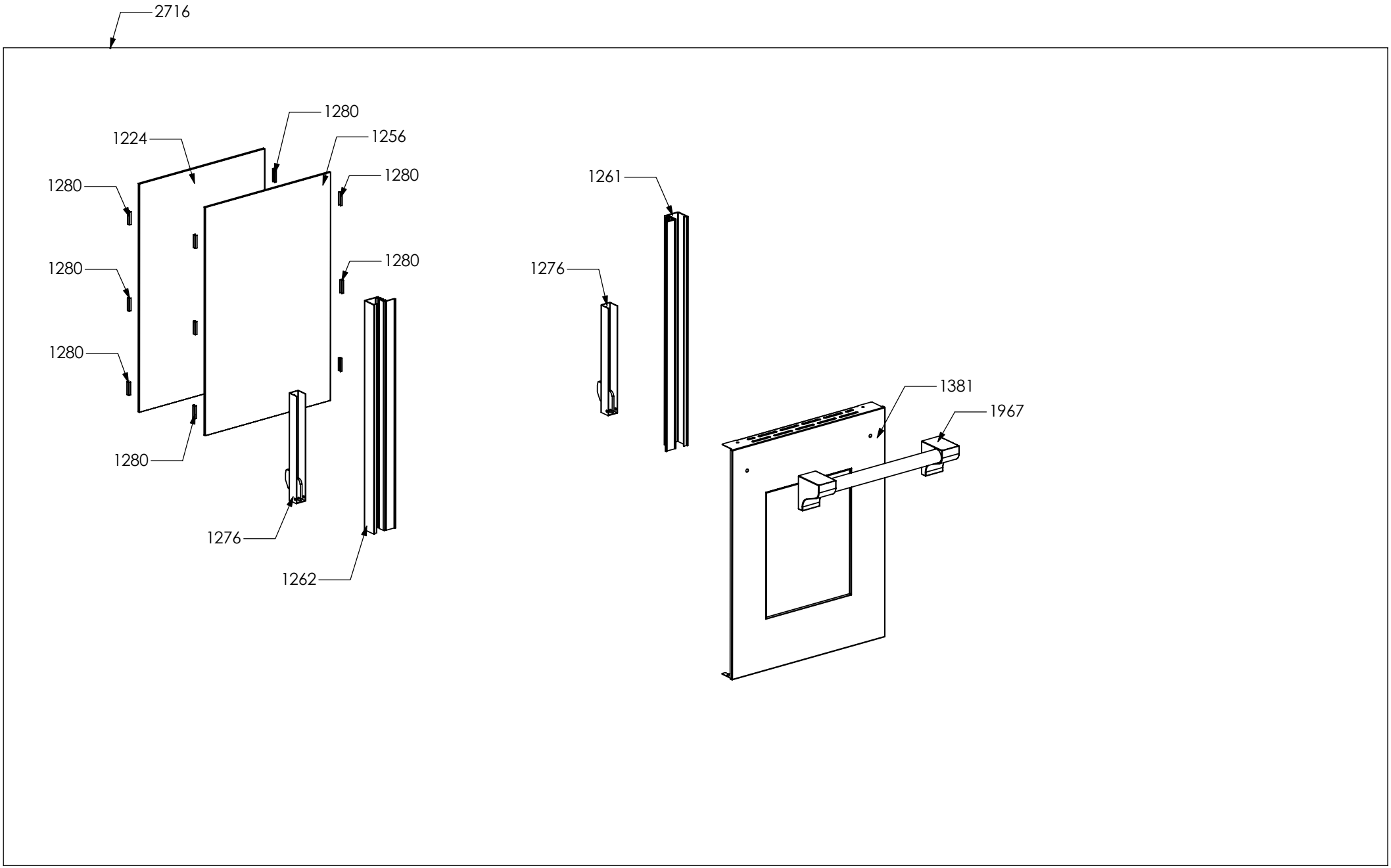

# Cucina ascot A10FF-4M X-C S Steel G20/20 230/50 EU

| N° Object | Code | Description | Qty |
|---|---|---|---|
| 1224 | ZS2311 | Inner glass oven door 30 | 1 |
| 1256 | ZS2390 | In-between glass oven door 30 04 | 1 |
| 1261 | ZS2396 | Door 30/60/90 right bar profile 04 | 1 |
| 1262 | ZS2397 | Door 30/60/90 left bar profile 04 | 1 |
| 1276 | ZS2413 | Door hinge for lateral oven 30 | 2 |
| 1280 | ZS2419 | Spring for door glass assembling | 12 |
| 1381 | ZS2546 | Glued external oven door 30 KL | 1 |
| 1967 | ZS3585 | Handle for oven door 30 Ascot 100/120 chromed | 1 |
| 2716 | GR4330 | Assembly glued external oven door 30 s.steel Ascot | 1 |

# Cucina ascot A10FF-4M X-C S Steel G20/20 230/50 EU

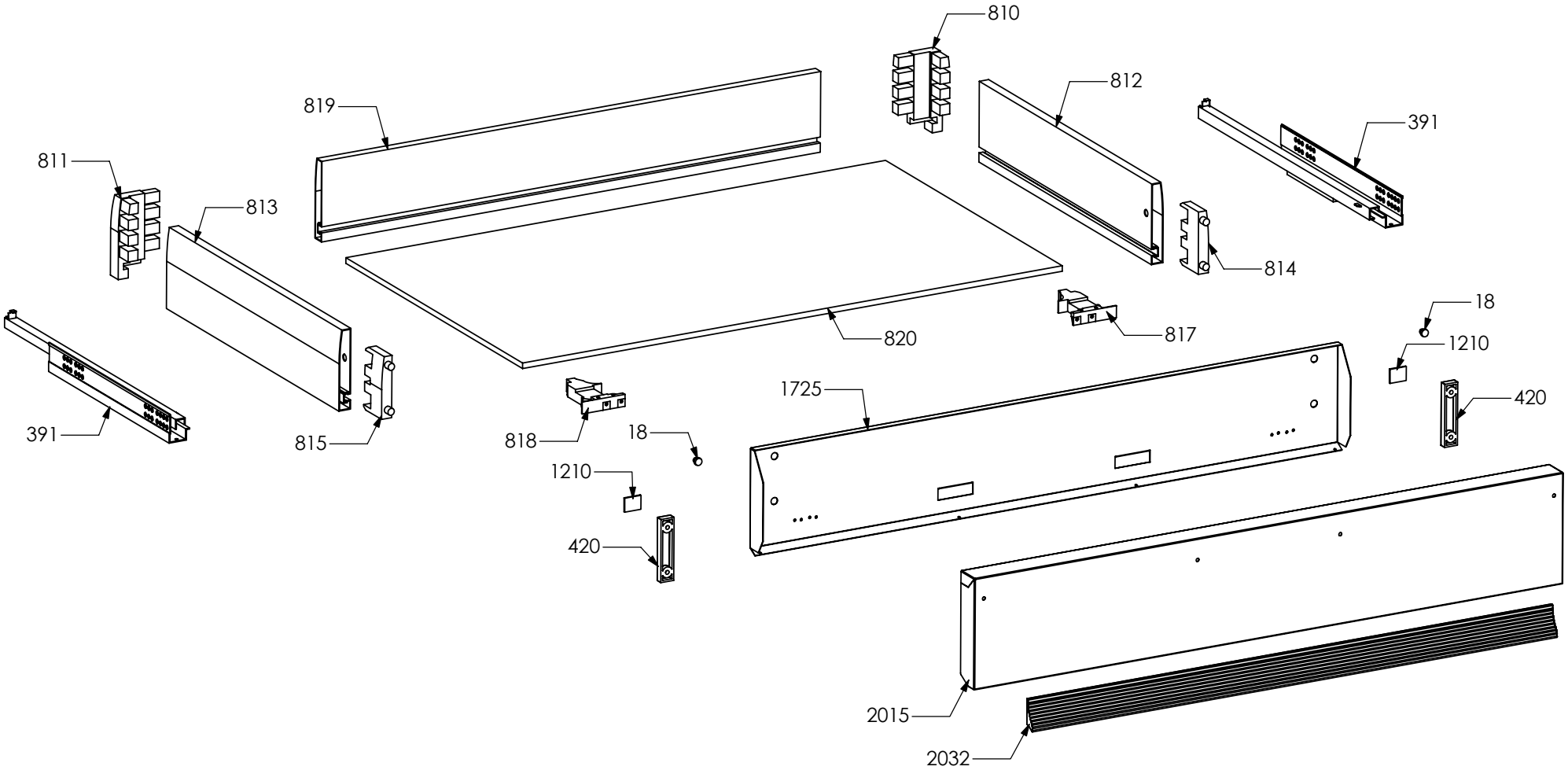

# Cucina ascot A10FF-4M X-C S Steel G20/20 230/50 EU

| N° Object | Code | Description | Qty |
|---|---|---|---|
| 18 | 400006 | Protection door | 2 |
| 391 | ZS0899 | Couple legobox rails | 1 |
| 420 | ZS1002 | Blocking device for drawer support 2 hole | 2 |
| 810 | ZS0449 | Drawer right corner | 1 |
| 811 | ZS0451 | Drawer left corner | 1 |
| 812 | ZS0453 | Drawer right side | 1 |
| 813 | ZS0454 | Drawer left side | 1 |
| 814 | ZS0455 | Drawer right fixing support | 1 |
| 815 | ZS0456 | Drawer left fixing support | 1 |
| 817 | ZS0458 | Drawer right regulation clip | 1 |
| 818 | ZS0459 | Drawer left regulation clip | 1 |
| 819 | ZS0460 | Drawer 100 DC / 120 DC rear side | 1 |
| 820 | ZS0461 | Drawer 100 DC / 120 DC bottom | 1 |
| 1210 | BS0377 | Adhesive tape 33 mt x 17h mm x th 0,6 mm (3M 4930) | 2 |
| 1725 | ZS2946 | Counterdoor drawer cooker 100 double oven | 1 |
| 2015 | ZS3209 | Drawer door cooker 100 Ascot s.steel | 1 |
| 2032 | ZS3534 | Profile control panel drawer 100 Ascot chromed | 2 |

# Cucina ascot A10FF-4M X-C S Steel G20/20 230/50 EU

| N° Object | Code | Description | Qty |
|---|---|---|---|
| 112 | 500906 | Chromed black washer | 9 |
| 133 | BS0314 | Gasket black 2 x 10mm | 1,05 |
| 222 | ZS0378 | Polystyrene door protection | 5 |
| 725 | 601108 | Anti-overturning device | 0,3 |
| 1505 | ZS2840 | Wiring diagram for cooker S10FF-6 | 1 |
| 1586 | ZS2770 | Additional wiring generic L=60 cm Fem Fem | 2 |
| 1661 | ZS2769 | Additional wiring ground L=60 cm Fem Fem | 1 |
| 2029 | ZS3358 | Instruction booklet Top/Cooker Sintesi GB | 1 |
| 2074 | ZS3831 | Oval aluminium badge "Ascot by Steel" | 1 |
| 2296 | ZS2666 | Wiring commutators L=20 cm | 6 |
| 2307 | ZS3763 | Wiring leds Party | 1 |
| 2377 | ZS3628 | Wiring for timer | 1 |
| 2744 | ZS4421 | Instruction booklet Top/Cooker Ascot IT | 1 |
| 2745 | ZS4422 | Instruction booklet Top/Cooker Ascot UK | 1 |
| 2747 | ZS4424 | Instruction booklet Top/Cooker Ascot FR | 1 |
| 2748 | ZS4425 | Instruction booklet Top/Cooker Ascot DE | 1 |
| 2749 | ZS4426 | Instruction booklet Top/Cooker Ascot DK | 1 |